TECHWIN

CLOSED TYPE COOLING TANKS (MP POWERTANK MODEL)

www.techwin.co.ke

Techwin Limited
Techwin Industrial Park
Homa Bay Road, off Enterprise Road,Industrial Area
P.O. Box 2768-00200, Nairobi, Kenya
Tel: +254 20 232 9654, +254 743 793 878
Email: info@techwin.co.ke, Website: www.techwin.co.ke

CLOSED TYPE COOLING TANKS

MP Powertank tanks are horizontal type stainless steel tanks with access manholes and automated systems for washing and disinfection after every emptying. Capacities range from 1,000lt to 14,000lt and elliptical from 10,000 to 20,000lt

PRODUCT FEATURES

Cooling unit

Made for 2, 4 or 6 milkings and can be equipped with 1, 2 or 4 cooling units providing strong cooling and reliability. The circuit is equipped with a solenoid valve, separate pressure switches to control high and low pressure of the cooling circuit, a pressure switch to control-the second fan, a filter, a receiver bottle for the freon, a safety valve on the receiver, an expansion valve of appropriate power, separate thermomagnetic switches installed on the power circuit for each compressor and a voltage controller for protection and better performance.

Insulation

All models are insulated with polyurethane foam ensuring that a few minutes operation of the cooling unit is sufficient to preserve the pre-cooled milk.

Stainless Steel External Pressure Equalizer

The stainless steel filter of the tanks prevents air entrapment inside the tank during its filling and facilitates drainage.

Measuring Dipstick

They are equipped with a stainless steel measuring dipstick and a conversion table in litres for easy calculation of the quantity of milk.

Agitation Motor

MPP cooling tanks are equipped with powerful motors that are placed on an elevated base to ensure easy cleaning. Tanks from 8,000 to 20,000 litres have two or three motors for better agitation of the quantity of milk.

Manhole

The stainless steel manhole of the tanks provides superior sealing without the use of a flange. It is fully rotatable and its smart design allows it to be held in the open position.

Ladder

All models over 1,500lt have a stainless steel ladder with anti-slip steps for the inspection of the milk content through the manhole at the top of the tank.

Milk Inlet

The MPP cooling tanks have 1 or 2 milk inlets. They are sealed with a stainless steel cap for the protection of the content of the tank.

Milk outlet

For all models a stainless steel butterfly valve is used for milk outlet.

Temperature sensor

The position of the temperature sensor has been carefully selected so that it is easily replaced in case of failure.

Stainless steel adjustable legs

The MPP tanks have 4 to 12 support legs all height adjustable, for proper alignment even on uneven floors

PRODUCT DIMENSIONS

1,000lt – 14,000l

The round type MPP milk cooling tanks are available in 13 different models with capacities from 1,000lt to 14,000lt with one or two cooling units to meet the needs for 2-6 milkings.

Type	LEGS	A (mm)	B (mm)	C (mm)	H (mm)	F (mm)	H1 (mm)	L (mm)	G (mm)	Hf (mm)	Hm (mm)	HL (mm)
MPP1000	4	422.5	845	600	2149	1060	1024	1690	1399	345/375	310	750
MPP1500	4	300	950	750	2416	1350	1291	1550	1666	345/375	310	750
MPP2000	4	507.5	1005	750	2416	1350	1291	2020	1666	345/375	310	750
MPP2500	4	450	1450	750	2416	1350	1291	2350	1666	345/375	260	750
MPP3000	4	725	1450	750	2416	1350	1291	2900	1666	345/375	260	750
MPP3500	4	725	1950	750	2416	1350	1291	3400	1666	345/375	260	750
MPP4000	4	592.5	1185	900	2858	1680	1603	2370	2008	345/405	260	850
MPP5000	4	725	1450	900	2858	1680	1603	2900	2008	345/405	260	850
MPP6000	6	200	1550	900	2858	1680	1603	3500	1978	345/375	260	850
MPP8000	8	175	997	1090	3177	1990	1882	3341	2327	365/445	260	850
MPP10000	8	175	1270	1090	3177	1990	1882	4160	2327	365/445	260	850
MPP12000	8	200	1143	1300	3396	2230	2101	3829	2546	385/445	260	850
MPP14000	8	225	1350	1300	3396	2230	2101	4500	2546	385/445	260	850

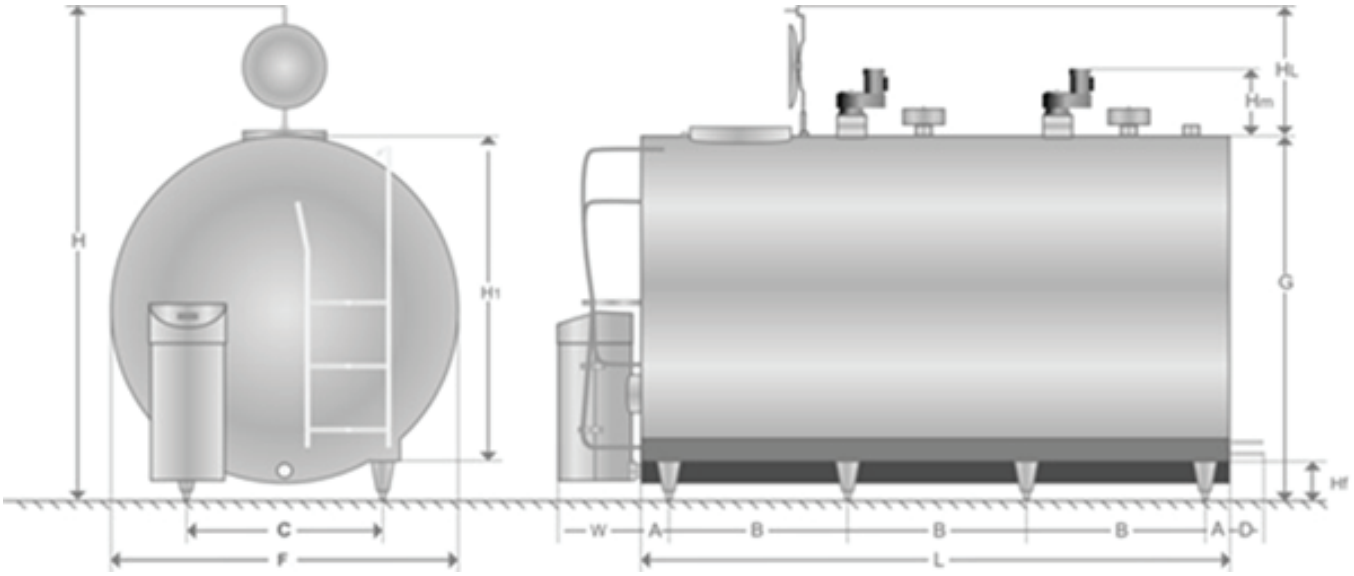

10,000lt – 20,000lt

The elliptical type MPP Oval milk cooling tanks are available in 6 different models with capacities from 10,000lt to 20,000lt and are suitable for large dairy units.
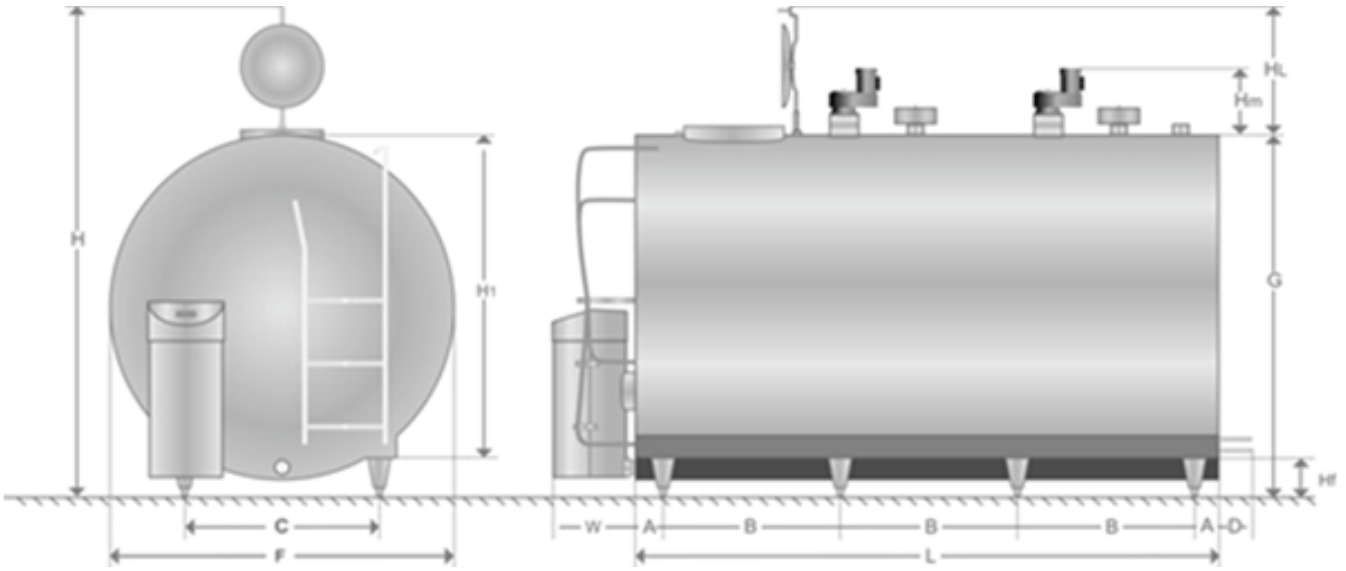
Type	LEGS	A (mm)	B (mm)	C (mm)	H (mm)	F (mm)	H1 (mm)	L (mm)	G (mm)	Hf (mm)	Hm (mm)	HL (mm)
MPP010000	8	175	1500	1142	2904	2050	1609	4850	2054	385/445	260	850
MPP012000	8	175	1350	1440	3040	2300	1745	4430	2190	385/445	260	850
MPP014000	8	175	1540	1440	3040	2300	1745	4980	2190	385/445	260	850
MPP016000	10	195	1350	1440	3070	2300	1745	5600	2220	385/475	260	850
MPP018000	12	175	1215	1445	3070	2300	1745	6450	2220	385/475	260	850
MPP020000	12	418	1272	1440	3070	2300	1745	7200	2220	385/475	260	830